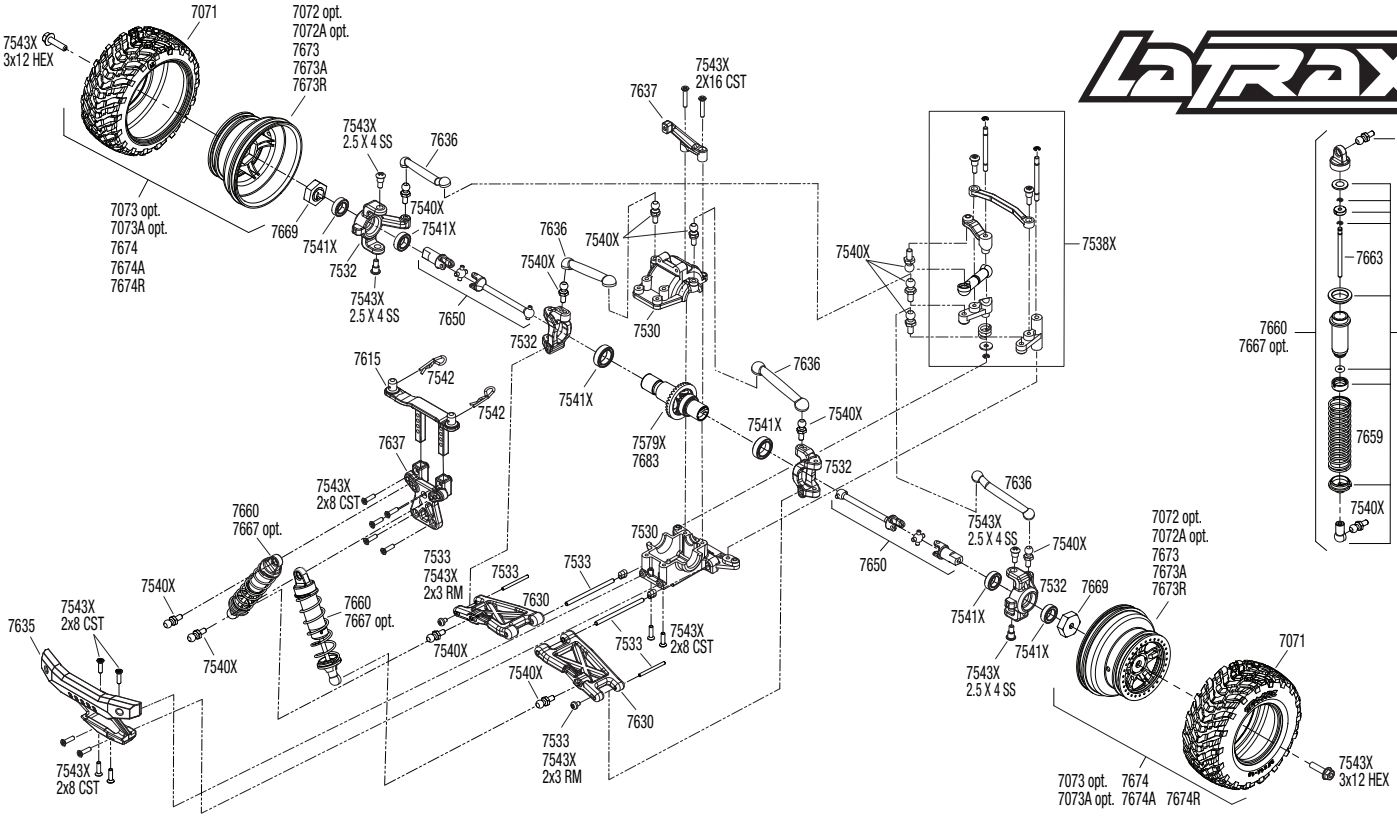

DESERT PRERUNNER

Front Assembly

Model 76064-5

Specifications on this page are subject to change without notice. Every attempt has been made to ensure the accuracy of this drawing; however, LaTrax cannot be held responsible for typographical or other errors.

See Parts List for a complete listing of optional accessories.

REV 170504-R00

DESERT PRERUNNER

Chassis Assembly
Model 76064-5

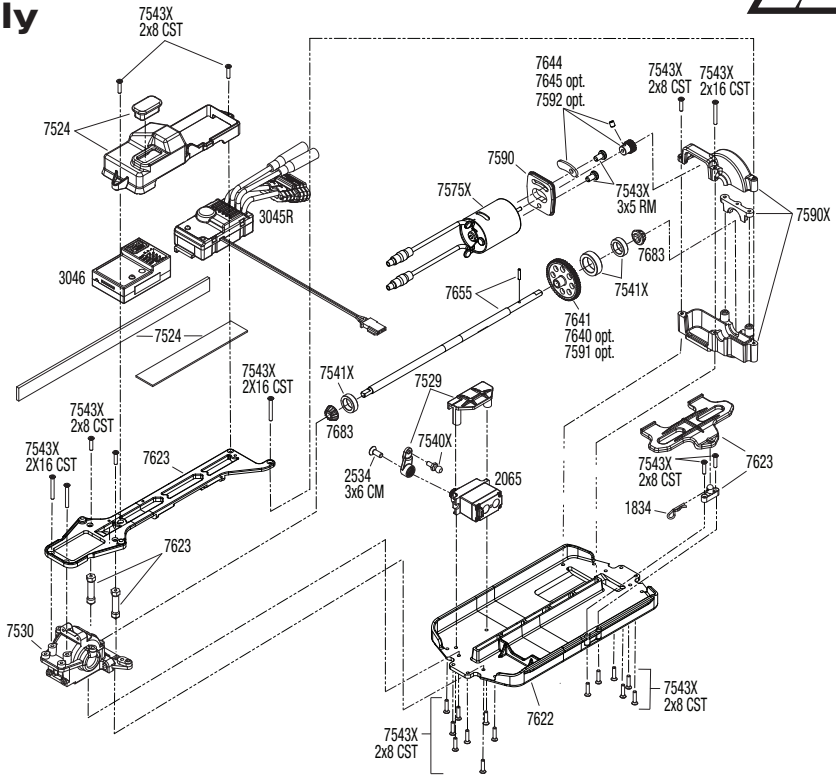

REV 170504-R00

See Parts List for a complete listing of optional accessories.

Specifications on this page are subject to change without notice. Every attempt has been made to ensure the accuracy of this drawing; however, LaTrax cannot be held responsible for typographical or other errors.

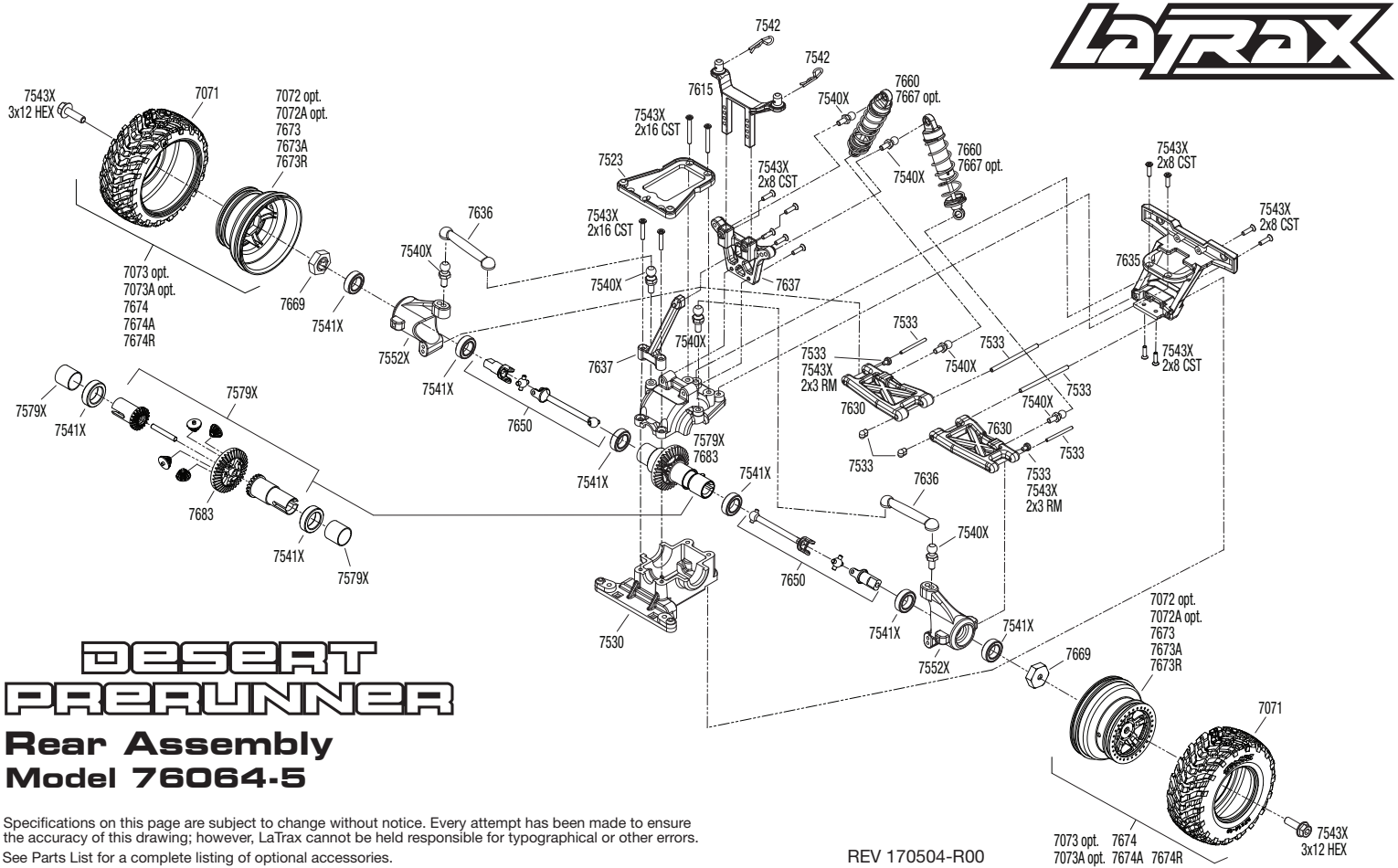

DESERT PRERUNNER

Rear Assembly
Model 76064-5

Specifications on this page are subject to change without notice. Every attempt has been made to ensure the accuracy of this drawing; however, LaTrax cannot be held responsible for typographical or other errors.

See Parts List for a complete listing of optional accessories.

REV 170504-R00